The National Cancer Institute Real Time Picture Processor

The National Cancer Institute Real Time Picture Processor

This history was compiled by Peter Lemkin with interviews, recollections, and content from Lewis Lipkin, George Carman, Bruce Shapiro, and Morton Shultz and some of the users (Carl Merril, Peter Sonderegger, Eric Lester). It could not have been done without everyone's input, which is reflected throughout the history. See the Acknowledgements for additional credits and information on online reference material donated as part of this history.

1. Introduction
    - The birth of the concept of the RTPP
    - Evolution of the computer-controlled microscope
    - The unique RTPP parallel-bus architecture (at that time)
2. The Real Time Picture Processor Development Team
    - Major RTPP designers and developers
    - Major RTPP users and their biomedical research
3. The NCI Autoradiograph Grain Counter: Precursor of the RTPP
    - The Grain Counter Project was the first major project for the RTPP Design Team
    - DEC's Fortran-II allowed direct access to new I/O hardware
4. Description of the NCI RTPP
    - Axiomat microscope z-axis control
    - The first stage of the RTPP design - the image buffer memories
    - The second phase of the RTPP design - General Picture Processor
5. The Design Process for the RTPP
    - Building the image buffer memory boards
    - Delivery and debugging of the RTPP hardware
    - The microscope design - the Axiomat
    - RTPP and the move from Bethesda to the Park Building in Rockville
    - BMON2 software control program for the RTPP
    - Fortran-II source code of BMON2 and the image processing functions
    - The DECsystem-2020 and the RTPP
    - The PDP11 virtual device control between the DECsystem-2020 and Comtals
    - Analysis software using the RTPP/DECsystem-2020
6. Details on the RTPP Design
7. Applications of the RTPP in Biomedical Research
    - Description of optical microscope applications
    - Serial sectioning of Anolus brain
    - Use of the RTPP for 2D gel electrophoresis
    - Use of the RTPP for RNA secondary structure analysis
8. Discussion of What We Learned
9. Acknowledgements
10. References to Papers and Technical Reports for the RTPP
    - Journals:
    - Technical Reports:

---

1. Introduction

The Real Time Picture Processor (RTPP) was one of the first special-purpose hardware computers developed for grayscale image processing and was designed to aid in biological image analysis. It was developed at the National Cancer Institute (NCI) of the National Institutes of Health (NIH).

Many properties of biological materials can be visualized directly using microscopy, electrophoresis, or other visualization mechanisms. The image subjects may have been improved before digital image capture using various detection-enhancement methods (such as stains, dyes, autoradiography, phase-contrast, interference microscopy, etc.) to visualize the data of interest. Digital image processing (see wikipedia.org and dictionary.com entries) is a method for the separation, detection, and quantification of the objects of interest in biological materials. Quantified data helps scientists perform more rigorous analyses of their biological experiments and improve the conclusions of their analyses.

There are two major goals of this history: to document the events and conditions that led to the creation of one of the first grayscale image processors, and to describe the highly effective complementary collaboration that allowed this project to flourish. Occasionally, references will be made to other later advances indirectly related to the RTPP work that would not have happened without the RTPP. Where possible, we have linked to open access journal PDFs, and have included PDFs of the key technical reports describing the RTPP on this Web site.

The birth of the concept of the RTPP

The RTPP project was conceived and initiated by Dr. Lewis "Lew" Lipkin, M.D., head of the Image Processing Unit, later the Image Processing Section (IPS), in the the National Cancer Institute (NCI). The intellectual concept behind computer-controlled microscopy started in 1962 when Lew was an assistant professor of neuropathology at Downstate Medical Center in New York. Professor Patrick Fitzgerald, Chairman of the Pathology Department at Downstate, was studying pancreatic cell growth. Dr. Vinichaichol, who was doing visual grain counts on thin pancreatic sections, was finding mixed results. The problem was statistical. Dr. Lipkin was asked to design a proper sampling technique. Grain counting was a method used to measure cell metabolism before the days of antibody techniques applied to living cells and fluorescent techniques that came about during our time in NIH. Lew, who happened to know something about statistics, was asked by Dr. Fitzgerald to find out what was wrong with his statistics. After some thought, Lew realized that Dr. Vinichaichol was staying in one area of the slide and he had no way of knowing when he was recounting the same cells. Lew didn't want to continue looking at biological material that he couldn't explore without using some form of quantification.

Lew's solution was to view the slide as an array, a 2-dimensional (2D) matrix where each visible area had a unique 2-dimensional address on the slide. The sections were very thin so that all the grains at a location were visible; the Z-axis in this case could be ignored. Lew's system used a list of random number XY positions, which were applied to each slide. Dr. Vinichaichol would go to these areas and count whatever grains were there. If there were no cells, there were zero counts. And suddenly everything fell together. The new method was what Dr. Fitzgerald needed. This result was published in 1968 in the *American Journal of Pathology* Fitzgerald, P. *et.al.*, 53(6):953-970, "Pancreatic acinar cell regeneration. V. Analysis of variance of the autoradiographic labeling index (thymidine-H3)."

So Lew conceived of the idea to use the microscope slide as an information resource in 1962. This work also created the concept of the researcher creating a "pick-list" of cell positions that could be used in future analysis. Over time there were many extensions to this concept. For example, one could sample a set of picked-out cells in a tissue culture and make periodic measurements over time, or scan the image with different wavelengths of light to take advantage of different staining characteristics.

Dr. Richard Masland, M.D., the director of the National Institute of Neurological Disease and Blindness (NINDB), invited Lew to join the National Institutes of Health (NIH) in 1962. Lew was one of perhaps 20 neuropathologists in the country at the time. Later NINDB became the National Institute of Neurological Disorders and Stroke (NINDS). NINDB was looking for a neuropathologist for the Perinatal Research Branch (PRB) headed by Dr. Heinz Berendes, M.D. When he first came to NIH, Lew was determined to build something that implemented his ideas of mapping in biological images. He had an original LINC (Laboratory INstrument Computer created at MIT with NIH funding) computer at the time. Later, Lew upgraded this to a Digital Equipment Corporation (DEC) LINC-8. The problem: he had a microscope and he had a computer. How could he combine the two?

The first thing he wanted to be able to do was move a slide via a computer-controlled microscope stage. Initially, he was going to do it with analog feedback. He talked to Wes Clark (who had helped build the LINC computer with Charlie Molner and others). Wes convinced Lew that he really wanted a digital stage - not an analog one - so that is what Lew developed: a series of stepping-motor-controlled stages that improved with each generation. The original design connected the stage with rubber bands, which was then greatly improved with direct stepping-motor drives. Lew had also been working with Russell Kirsch and Bill Watt from the National Bureau of Standards (NBS, now the National Institute of Standards and Technology or NIST). This early work involved describing biological images using computer picture grammars [1] that attempted to bring artificial intelligence and algorithmic methods to the description of biological images.

Evolution of the computer-controlled microscope

In 1968, I (Peter Lemkin) joined Lew's group to work on programming the LINC-8 along with Howard Shapiro of the PRB, and Russell Kirsch, Don Orser, and Phil Stein from the NBS who had been involved in the project. The first lab was in rental space in the Auburn Building across from the Bethesda Chevy Chase Rescue Squad where we would hear the fire trucks when they went out on a call. The group moved to the brand new Building 36 on the NIH Bethesda campus around 1970, which was a much better environment. (Building 36 was demolished in 2006.) The LINC-8 controlled a stepping-stage and a galvanometer scanner with a photomultiplier detector on a Leitz microscope, which was an early step in automated cytology [7]. It was very slow, but did offer high-quality 8-bit data. The problem was analysis power - in terms of scanning speed, CPU speed, image memory, analysis software, and analysis memory. It became clear that we did not have the hardware resources required to do complex image processing on the types of data we were determined to analyze. However, I learned to write hardware control software on the LINC-8 as it was truly a dedicated laboratory instrument computer ideal for connecting to laboratory equipment. This experience set the stage for the next generation of computer-controlled microscopes we tackled.

The second computer-controlled microscope project was the NCI grain counter [2] that is discussed in its own section. Advancements in electronics technology enabled us to design the grain counter using high-speed shift-register memory chips to capture X,Y coordinates from a 10 frame/second non-interlaced TV system (Imanco Quantimet 720). Despite these advances, for larger image memories such as was needed for the RTPP, it would have been very difficult to implement image processing algorithms. This is because shift-register memory has delays in accessing any particular image pixel datum since the data must cycle around the circular shift register before the computer could access it. For complex algorithms with millions or billions of operations, this would be intolerable.

The culmination of these efforts was the Real Time Picture Processor (RTPP) described in journal papers [3, 4, 5, 6], as well as technical reports to be discussed and listed at the end of this history. We started this project just as the new Texas Instruments 4K bits X 1-bit dynamic RAMs (Random Access Memory - see history ofDRAM) became available. Their availability was discovered by George Carman who proceeded to design the RTPP using these new chips. Many skilled people made this project possible: the superb computer hardware architecture work by George and the mechanical engineering work by Sprague Hazard; the coming together of the right group of people, with synergistic skills who got along as a family, at the right time when the technology and the NIH's support resources were available; the NCI's Director Seymour Perry and administrator Bill Penland gave us crucial encouragement and financial support. Dr. Perry invited us to move to NCI as the Image Processing Unit (IPU) about 1972. In projects of this type, there is a window of time when the technology is appropriate for the job. Without the 4K dynamic RAMs, the RTPP would not have been possible. We were doing cutting-edge research, but a year or two later, charge-coupled devices would make their appearance and eventually make much of our design obsolete. But that is the nature of progress.

We left NINDB for the IPU in the early 1970s and became the Image Processing Section (IPS) at NCI about 1980, and moved to the Park Building, Parklawn Drive, in Rockville. Although the members of the IPS went on to work in other areas not directly related to the RTPP, this history will concentrate on the work that was directly related to the RTPP.

The unique RTPP parallel-bus architecture (at that time)

One of the unique aspects of the RTPP was to implement the design as special-purpose parallel hardware with a flexible bus-architecture and a microcode d instruction set that reflected the types of operations routinely performed in image processing [3-4, TR-2, TR-7, TR-7a, TR-22]. Although other image processing computers were available, such as the ILLIAC-III, using a microcode architecture enabled an image processor to be constructed and built less expensively but with greater flexibility than building it entirely with discrete hardware. The special-purpose hardware could make real-time results possible (defined as reasonably fast enough to incorporate human feedback in tuning algorithms, such as interactively adjusting detection thresholds, etc.). A National Technical Information Service (NTIS)technical report [TR-7] describing the RTPP was one of the frequently requested reports one month as reported in their monthly newsletter for November 1976 under computer topics.

Today, special digital signal processing (DSP) chips, very fast processors and memories perform this type of processing (used in video games, pocket cameras, and cell phones for example), rendering the original 1970s RTPP design obsolete. However, many of the concepts used in the RTPP design were unique and influenced other image processing hardware designs. As another example of this trend, confocal microscopy using a huge amount of image processing and memory is today routinely being done on small but powerful PC laboratory computers. Special-purpose hardware is no longer required.

The RTPP design was to be constructed in two stages: an image buffer memory subsystem, and later the General Picture Processor (GPP) [3-4, TR-2, TR-7, TR-7a, TR-16, TR-22]. The image memory was part of a grayscale digital image-capture system that was successfully used in various biology research areas to help analyze optical microscope images - both static and dynamic time-lapse, 2-dimensional (2D) electrophoretic gel images, and RNA electron micrographs of secondary structure, and other biological materials. It was used from about 1976 until it was decommissioned in 1984. For the second planned stage we had completed the design. However, the GPP was never constructed since high-speed computer technology was advancing rapidly and increasingly available to researchers, and it was difficult to justify additional research funds. The technology paradigm had shifted.

Scientists used the RTPP as finally constructed to analyze data in a variety of biomedical domains including optical microscope images of optical serial sections of brain tissue, stained bone marrow smears, and tissue cultures using phase contrast and differential interference optics. The latter was used in tracking cell membrane extents of macrophages in tissue culture over time as the cells tried to phagocytize various types of asbestos fibers. The goal was to better understand fiber carcinogenicity and the dynamics of fiber ingestion [8, 9, 10]. The bone marrow smear image analysis was part of my Ph.D. dissertation [11, 12, TR-653, TR-655]. The RTPP was also used for 2D electrophoretic gel images for a variety of biological materials [13, 14, 15, 16, 17, 18, 19, 20, 21, 22, 23, 24, 25, 26, 27, 28, 29, 30, 31, 32], and for RNA electron micrographs of secondary structure, which was part of Bruce Shapiro's Ph.D. dissertation [33, 34, 35, 36, 37, 38, TR-BAS78].

Figure 1. Dr. Lewis Lipkin headed the project. His group started working on computer-controlled optical microscopy in the Perinatal Research Branch (PRB) of NINDB. The group later changed its name and institutes to the Image Processing Unit (IPU) in NCI in the Laboratory of Pathology. IPU later became the Image Processing Section (IPS) in NCI. The Section later became part of the Laboratory of Mathematical Biology (LMMB) in NCI under Dr. Charles DeLisi, Ph.D., and still later under Dr. Jacob Maizel, Ph.D.. The laboratory changed its name to the Laboratory of Experimental and Computational Biology (LECB) under Jake Maizel. The laboratory is currently refocused on nanobiology and is now called the Center for Computer Research Nanobiology Program (CCRNP) directed by Dr. Robert Blumenthal, Ph.D.(CCRNP has an additional research Web site).

2. The Real Time Picture Processor Development Team

The following individuals were involved with the design and development of the RTPP. The history goes into the who, what, where, when, and why. The second list enumerates some of the individuals doing biomedical research in which the RTPP played a role.

Major RTPP designers and developers

- Lewis Lipkin, M.D., (mathematics and physical chemistry, and a neuropathologist), Head of the Image Processing Section (IPS); previously the (PRB, NINDB) and then the Image Processing Unit (IPU) in the NCI.
- Peter Lemkin, Ph.D. & M.S. EE, computer scientist and electrical engineer, IPS/NCI, and previously in (PRB, NINDB) and in IPU/NCI
- George Carman, M.S. EE, electrical engineer and computer hardware architecture, Technical Development Section (TDS), NINDB; Carman Engineering (now Lucidyne Corp).
- Morton Schultz, B.S. EE, electrical engineer, IPS/NCI, and previously in IPU/NCI
- Bruce Shapiro, Ph.D., B.S. math & physics, computer scientist, IPS/NCI, and previously in (PRB, NINDB),and in IPU/NCI
- Sprague Hazard, mechanical engineer (contractor consultant)
- Peter Kaiser, B.S. CS, computer scientist (IPU) in the NCI
- Earl Smith, M.S. CS, computer scientist (IPU) in the NCI
- Dan Kilgore, B.S. EE, computer programmer [Digital Equipment Corp (DEC) software engineer]
- Tom Duval and later Jim Camper, electronics technicians - helped construct the RTPP racks, and power-supplies cabinets
- Cambion Corporation, wire-wrapped the remaining 63 buffer memory boards and the back-planes

Where: PRB was the Perinatal Research Branch in the National Institute of the Neurological Disease and Blindness (NINDB). IPU was the Image Processing Unit of the National Cancer Institute (NCI). The IPU later became the Image Processing Section (IPS).

Who: The initial participants were Dr. Lewis Lipkin, myself, and George Carman. Later in the process, Morton Schultz and Bruce Shapiro joined the design group. Peter Kaiser and Earl Smith participated for a few years. During this time, Bruce Shapiro and I were part-time Ph.D. students in the Computer Science Department of the University of Maryland with Professor Azriel Rosenfeld, one of the early leaders in the field of image processing. Both Bruce [35, 37, 38, 39, TR-BAS78] and I [8,12, TR-653, TR-655] wrote dissertations on image processing. We were able to combine some of our applied NIH research as part of our Ph.D. research and use what we were learning about image processing and computer science to our NIH research. George was able to apply many of the ideas he had learned with his masters in Computer Hardware Architecture.

Major RTPP users and their biomedical research

Below are some of the biomedical research projects in which the RTPP played a role.

- Lewis Lipkin: optical microscopy of serial brain sections and macrophage motility measurements with asbestos
- Peter Lemkin: bone marrow smear analysis, 2D gel electrophoresis
- Bruce Shapiro: RNA secondary structure of electron micrograph
- Carl Merril: NIMH/NIH - 2-dimensional (2D) gel electrophoresis, *E.coli* mutants and macrophages with asbestos
- Jacob Maizel: NICHD/NIH, with Bruce Shapiro - RNA electron microscopy of secondary structure
- Eric Lester: NCI, U. Chicago, and oncology practice - 2D gel electrophoresis on human leukemia
- Steve Aley and Russell Howard: NIAID/NIH - 2D gel electrophoresis of *Plasmodium knowlesi* clones
- Peter Wirth and Snorri Thorgeirsson: NCI/NIH - 2D gel electrophoresis on liver cell lines
- Peter Sonderegger: NICHD/NIH and U. Zurich - 2D gel electrophoresis of axonal proteins of sensory and motor neurons

Figure 2. One of the first images taken using the RTPP was of the development group just after we got the Digital Equipment Corporation DECsystem-2020 interface to the RTPP buffer memory working. The image was one we called "mcrew" (i.e., 'machine crew'). Top row (L-R): Dan Kilgore, George Carman, and Morton Schultz. Bottom row (L-R): Earl Smith and Peter Lemkin. Not shown: Bruce Shapiro and Lew Lipkin who were integral parts of the RTPP design and development team.

Figure 3. The Digital Equipment Corporation DECsystem-2020 running the TOPS-10 operating system. The system is shown with Bruce Shapiro, holding a removable 180MB "bathtub" size disk pack (on the left), and Peter Lemkin (on the right). It had 512K words, 36-bits/word, 256K word virtual space/user, a very powerful instruction set, and many high-level computer languages, including SAIL (Stanford Artificial Intelligence Language - see wikipedia.org entry on SAIL), that made implementing complex analysis algorithms much easier than on the PDP8e. SAIL was developed by Dan Swinehart and Bob Sproull of the Stanford AI Lab in 1970. Sproull was at Division of Computer Research and Technology (DCRT) in the early 1970s and introduced the language to DCRT [the precursor of NIH's Center for Information Technology (CIT)]. Over time, we implemented more of the advanced image processing and pattern recognition algorithms in SAIL, using the RTPP as a sophisticated data acquisition and interactive graphics front-end. Later many of these algorithms were rewritten in C and UNIX using X-windows (we rewrote the C/UNIX/X-windows GELLAB-II exploratory analysis system from the SAIL/TOPS-10/RTPP GELLAB-I), and in LISP (StructureLab with a Symbolics Lisp machine and later a Unix Platform) when the DECsystem-10/20 computer lines were phased out in favor of the VAX computer lines. Later still, much of the C code for GELLAB-II was converted and rewritten in Java and used as part of the Open2Dprot project. We will discuss some of these projects later under the section Applications of the RTPP in Biomedical Research.

3. The NCI Autoradiograph Grain Counter: Precursor of the RTPP

The Real Time Picture Processor project was initiated after the successful completion of another project, the National Cancer Institute (NCI) autoradiograph grain counter [2]. This was one of the first computer-controlled microscopes (from the "NIH Record," about 1974). At the time, fluorescent antibodies were not commonly used for quantifying metabolism, so cell metabolism was often measured using autoradiography methods. When cells were grown in tissue culture with 3H-radiolabeled media, the radioactivity incorporated into cells could be used to estimate their metabolism. Dried slides of the cell culture sample were coated with photographic emulsion and exposed for weeks to months in the dark. They were then photographically developed making the silver grains embedded in the emulsion visible. Grains could be tracked and uniquely counted by serially focusing through the emulsion as individual grains were followed. The number of grains was proportional to the amount of 3H-radiolabeled media taken up by the cells and was a quantitative measurement of metabolism. The user would select a set of cells to be counted, adding them to the pick-list, and then let the machine automatically revisit the cells and make the grain counting measurements.

The Grain Counter Project was the first major project for the RTPP Design Team

The grain counter system was constructed by George Carman, an electrical engineer who was finishing up at the National Institute of Neurological Disease and Blindness (NINDB) at the time and later worked on the project under contract; me, an electrical engineer who was starting a part-time Ph.D. program in computer science; and Lewis "Lew" Lipkin, a neuropathologist with extensive computer software and hardware experience. Lew's group was transitioning from NINDB to NCI. George was in the Technical Development Section (TDS) at NINDB under Jim Bryan and Ted Coburn, who were experts in analog circuits. The TDS provided all types of electronics and mechanical engineering support for NINDB from basic design services to machine shops that helped us enormously. Sprague Hazard was one of their expert mechanical engineering consultants and later became one of ours. George had just finished his masters in computer hardware architecture before coming to NINDB and was well versed in digital circuits. Lew contacted the TDS to help with the digital logic for the early stepping-motor-controlled digital stage and George responded. Lew and George hit it off very well, as each understood and appreciated the other's area of expertise. George had just finished a project for TDS working with Jim Bryan that involved capturing XY coordinates from an analog TV camera so they could be recorded on a DEC PDP12 computer. When Lew described the grain counting problem and discussed the capturing of XY coordinates with George for the future grain counter, George already knew how to do it. That's how it started.

The grain counter consisted of a small Quantimet image processing system, a Zeiss Isoplan microscope with a Zeiss XY-axes stepping-motor controlled stage and a Z-axis (i.e., focus) stepping-motor-control that we added. The mechanical setup was designed with the help of the TDS machine shop. A PDP8e computer was interfaced to this data acquisition hardware and stepping-motor (X,Y,Z)-axes control. The operator would find a radio-labeled cell using a joystick (X,Y) control and a Z-axis controlled stage. They would then initiate a data capture of the (X,Y) coordinates of all of the silver grains in the field into a hardware shift register. This would then be transferred to the PDP8e for each 0.2 micron steps in the Z-axis as the microscope focused up and down for thick sections. The grains were tracked between optical serial sections and the actual count of grains for the entire cell recorded without double-counting grains.

DEC's Fortran-II allowed direct access to new I/O hardware

We were able to easily control the microscope and process the data using a small amount of PDP8e memory because of the computer language used. DEC's Fortran-II software language compiler running under their OS/8 operating system for the PDP8e allowed the insertion of assembly language that could reference I/O instructions (called IOPs) directly and could also directly reference Fortran variables. This made programming our new hardware relatively easy to do.

The following is an example of Fortran-II mixed code from the RTPP BMOMNI I/O software library (used to access the RTPP hardware from the PDP8e). For those interested, several technical reports available in this history describe the RTPP I/O instructions and design in more detail [TR-7, TR-7a, TR-21, TR-22, TR-23]. The "S" in column 1 indicates that that line should be treated as assembly language; an assembly code variable with a "\" in front of it indicates it is a Fortran variable. The same code style was used with the grain counter as with the RTPP. On the surface, Fortran-II was not a very powerful language, but the combination of these two features made it ideal for easily programming special purpose hardware. We had learned how to control hardware from the software for the grain counter, so that hurdle was already solved when we tackled the RTPP hardware/software-interfacing problem. The success of this hardware/software/microscope system gave us the confidence to go to the next level, a general-purpose image-processing computer that was the RTPP. There is more discussion and the BMON2 source code later in this history.

The plan was to have the NCI replicate these grain counter systems in three or four grantee laboratories. We had put out bids for the replication of the system. But, as with many technological break-throughs, the system worked, but better, less-expensive methods using new antibody and flow cytometry methods were becoming available. So autoradiography was replaced by other systems for measuring and quantifying specific cell types where tracking individual silver grains was not required. The additional grain counters were never built.

4. Description of the NCI RTPP

The Real Time Picture Processor consisted of the following integrated components:

- a Digital Equipment Corporation (DEC) PDP8e computer, which acted as a controller
- a commercial Quantimet 720 analog video image processor with both vidicon and plumbicon non-interlaced high-resolution 10 frame/second TV cameras
- an image buffer memory that contained eight 256x256 16-bit pixel video memories (which could be used for display as sixteen 256x256 or four 512x512 8-bit grayscale memories, and/or computation)
- a controller for the image buffer memory interfaced to the PDP8e and Quantimet TV display
- and a future design of a parallel special-purpose general picture processor (GPP) to operate on the buffer memory.

The block diagrams for this configuration are shown in Figures 4 and 5. The Quantimet was designed to perform simple binary thresholding of video analog data and counting operations on the non-interlaced analog video signal, but could not perform complex grayscale operations such as neighborhood computations. Later the RTPP/PDP8e system was interfaced to a DECsystem-2020 computer running the TOPS-10 operating system. Image acquisition and user interaction were relegated to the RTPP/PDP8e while complex analyses were done on the DECsystem-2020. Many of the figures illustrating the RTPP were drawn by Jo Abbott, our secretary and graphics draftsperson, during the initial design phase before we moved to the Park Building.

Axiomat microscope z-axis control

The Quantimet plumbicon analog video camera was attached to a computer-controlled Zeiss Axiomat microscope with (X,Y)-axes (0.5 micron/steps) Zeiss stepping-motor stage, and Z-axis focus (0.2 micron/step) stepping-motor controlled by the PDP8e. The anti-backlash Z-axis stepping-motor control-assembly was added with the help of Sprague Hazard (the same TDS consultant we had used with the grain counter project), and constructed by the NINDB machine shop. The advantage of Hazard's brilliant anti-backlash Z-axis design was that by moving past the point of interest and then reapproaching it from the same direction each time, one minimized mechanical hysteresis so that random accessed points of the slide could be repositioned quite reliably in three dimensions. Lew's idea of the slide as a 2D array information resource had been expanded to a 3D array (X,Y,Z). The Quantimet analog vidicon camera was used with regular 35mm camera lenses with a uniform illumination light-box for scanning 2D electrophoretograms, electron micrographs of RNA molecules, and other image sources (see figure 18). It was used with a variety of normal, wide-angle and macro-zoom lenses depending on the material we were investigating. The cameras could be easily switched. The plumbicon had a more linear and wider dynamic range and was better suited for microscopy.

The first stage of the RTPP design - the image buffer memories

The RTPP digital image capture system was called the image "buffer memory" and could capture images directly from the selected Quantimet video camera. Using a $10,000 high-speed analog-to-digital converter (A/D) that was the size of a large DVD player, the analog video was digitized to be captured into the image buffer memories. Similarly, the digital output from the buffer memory was displayed on the Quantimet TV monitor through a high-speed digital-to-analog (D/A) converter. The RTPP system could display the live video or video derived from the image buffer memory on a high-resolution (860x720 pixels - high resolution at that time) non-interlaced TV display. This part of the system was completed and used in many projects. Today, digital cameras and cell phones with cameras have similar A/D and D/A capabilities for under $100.

Because the buffer memories were easily random accessed (one of the advantages of using RAMs instead of shift-register chips), it was in effect a 1-megabyte extension of the PDP8e memory that had a maximum of 32K 12-bit words. We used this to advantage when constructing various complex segmentation and spot pairing algorithms implementing linked-lists stored in the buffer memories. Occasionally, we would drop a bit in the buffer memory and the program would crash or go into an infinite loop as the linked-list got corrupted. However, on the whole, the buffer memory design was state-of-the-art at the time and allowed many of the applications we had created to work as well and to push the envelope on what could be done.

The second phase of the RTPP design - General Picture Processor

The second phase of the RTPP was the design of a special-purpose 48-bit triple-operand, real-time computer processor called the General Picture Processor or GPP. This GPP would perform parallel image processing operations on 3x3 pixel neighborhoods in the buffer memory throughout the selected images. The GPP design had two input operands and one output operand. Each operand was assigned to an image buffer (there were sixteen 256x256 8-bit pixels per image buffer). The GPP included 3x3 pixel triple operand instructions, which would tessellate over the entire 256x256 pixel image space. The design is described in [3-4, TR-7, TR-7a, TR-22]. A software assembler for the GPP instruction set (GPPASM) [TR-16] and a debugger (DDTG) [TR-2] for the GPP were written on the PDP8e and ready to use with the hardware when it was built. The GPP hardware part of the RTPP was not completed due to a shift in NCI budget priorities. Considering the exponential increase over time in computing power of general-purpose microprocessors as well as their greatly decreasing cost, this was probably a wise decision. It became clear that software efforts would be more effective for many (but certainly not all!) problems. The paradigm had shifted.

The design of the RTPP was presented at the 1973 Asilomar Third Engineering Foundation Conference on Automated Cytology and published in 1974 [3-4]. This conference and a subsequent automated cytology workshop concentrated on the two solutions then available: image processing and pattern recognition of cell images, and the evolving field of flow cytometry. NIH was funding both fields. During this time we developed plans for integrating artificial intelligence techniques for understanding and analyzing biological materials and systems incorporating the RTPP, and these were also presented at the Asilomar workshop [5, TR-15].

5. The Design Process for the RTPP

The project was started about 1972. By this time, George Carman had left the National Institute of Neurological Disease and Blindness (NINDB), moved to Oregon and was working under contract with our National Cancer Institute (NCI) group. I had been working on a Ph.D. in computer science at the University of Maryland with specialization in image processing and so had Bruce Shapiro. So the General Picture Processor (GPP) design reflected many of the requirements of image processing methods. Lewis "Lew" Lipkin, with his broad understanding of image processing, was also heavily involved in the design. Lew, Bruce, and I would discuss the types of image processing operations we required in brain storming sessions. Then, George and I would have long phone-conversation design sessions where I described the image processing needs discussed in the local Image Processing Unit's group design sessions to George who then worked out the details on how to implement the required operations in the hardware design. I documented these design sessions, which resulted in the technical reports [TR-2, TR-7, TR-7a, TR-16, TR-21, TR-21b,TR-22].

The hardware system design was a joint effort with primary hardware electronics design by George Carman and primary software design by me. The RTPP electronics design was incrementally created in many hours-long phone conferences between George and myself discussing and negotiating requirements for image processing, possible implementations, implications of the designs for hardware and for software, etc. These long, detailed discussions reviewed and modified our snail-mailed blueprints and design documents (this was before e-mail and common access to the Internet). Our phone sessions allowed the iteration, refinement, and extension of the design to take into account the difficulty of programming the proposed hardware and the difficulty and expense of building the hardware. This joint design also allowed the IPU (me in particular) to start building the PDP8e software to interface with the hardware before the RTPP was delivered. In the end, both goals were optimized and the system worked. Some of this process was described in [3-4] and a few of the critical design ideas are listed in this history in some of the figures.

Building the image buffer memory boards

Once George wired and debugged one of the buffer image memory boards, we had a contractor, Cambion Corporation, build the remaining 63 boards (see an example of a board in figures 8 through 10 below). Each board consisted of 64 4K-bit dynamic RAMs (Random Access Memory chips). Four boards implemented a 256x256 pixel by two 8-bit bytes sub-image. These were among the first "high" density memory chips available at the time. Of course being the first generation of a high-density dynamic RAM chip, they had a high failure rate. So George built memory-testing software on the PDP8e that could pinpoint a bad chip on a particular board enabling us to unplug the bad chip and replace it with a new one. This saved a huge amount of time in finding the bad chips and helped improve uptime of the RTPP during its lifetime.

Not only did Cambion build the buffer memory boards, but using their standard technology, they also wired much of the backplanes. Their technology was an integrated system, and had been developed for rapid prototype construction in aerospace projects. It included cards, sockets, and racks. The system would not have worked had the parts been obtained from different vendors. By adapting Cambion's standards, we were able to take advantage of the reliability Cambion had developed for this kind of work. After Cambion created the boards and backplanes, our electronics technicians assembled them into several cabinets of 19" vertical racks including one cabinet for the power supplies. The buffer memories were 16 cards to a rack, with four racks. To avoid overheating, the cards were inserted in every other slot. Then the equipment was shipped to George in Oregon to finish construction and debugging. We had purchased a PDP8e for him to use in developing, debugging, and testing the interface. The computer was also critical for George to create various software tools to help manage the project. These included a wirewrap database program that could take pairs of (drawing #, chip #, pin #) triples that indicated a pair of wires to be connected using a technique called "wirewrap." This methodology was critical since a single buffer memory card was described in a large number of blueprints and it would be difficult to keep straight which pins connected to other pins in this complex global diagram. George then wrote additional software to translate these pairs to the standard lists that Cambion required. In a biomedical image processing and electronics conference, George's triple notation and his new way to handle the increasing complexity of multiple drawing wiring lists received a good reception from some of the developers of VHDL (a hardware description language). Because of space limitations, George put the PDP8e into a closet of his house with additional AC cooling. The PDP8e at that time cost more than his house. Today, the most inexpensive computers are many orders of magnitude more powerful than the PDP8e at a small fraction of their cost.

Delivery and debugging of the RTPP hardware

After George got major parts of the system working in Oregon, he shipped the multiple electronics racks to Building 36 in Bethesda about 1976. He flew in for a week to help debug the initial buffer memories, the RTPP controller, and the connection to the Quantimet both for display and data capture. George and Mort Schultz, did a marathon week of late-night engineering debugging to work out some of the final kinks. Many pizzas helped fuel these sessions. I had been working in parallel on the software interface called BMON (Buffer Memory Monitor System), which was then tested against the hardware to see if it worked more or less according to the design. Hardware and software were iteratively changed as required to accommodate each other.

Later, Mort and I worked with George over the phone for additional sessions to further debug the hardware and integrate the first stage RTPP with the initial PDP8e control software. After George went back to Oregon, Mort had spent many hours with his hands-free phone headset talking to George and probing the RTPP with Tektronix oscilloscopes and test instruments including digital analyzers. The latter proved to be invaluable in debugging not only the RTPP, but also other digital interfaces to the DECsystem-2020 (to be discussed) and other systems.

A more robust version of the control software was called BMON2 (Buffer Memory Monitor System) was written and used to interact with the RTPP. It integrated other programs and scripts that analyzed data from the RTPP [40, TR-21, TR-21b, TR-23]. BMON2 was written in Fortran-II under the PDP8e OS/8 operating system. As with the grain counter project, the ability to mix assembly language in with the Fortran allowed easy control of the more than 100 hardware instructions that we added to the RTPP controller (See [TR-7a] for details).

The microscope design - the Axiomat

Under Lew's direction - and based on his long experience as a microscopist - the microscope concepts evolved over several generations of computer-controlled designs. The engineering machine shop in NINDB in Building 36 constructed the microscope assembly for the NCI grain counter project. They had an outstanding mechanical engineer consultant, Sprague Hazard, who previously solved some of the very tricky issues including removing the hysteresis in the Z-axis stepping-motor control for the grain counter microscope. He designed additional hardware for the microscope using anti-backlash gears with an approach similar of running the stepping motorsthat we had used in the grain counter. We used this method in the commercial X,Y microscope stepping-motor stage. He also designed a color-filter changer that implemented Lew's insistence on the importance of monochromatic light in micrographic analysis. The changer would swap interference filters in the light path. These successful experiences in constructing the grain counter were then leveraged when we built a new microscope around the Zeiss Axiomat for the RTPP - again with the help of Sprague Hazard who incorporated some very creative ideas.

The Axiomat was a dream microscope. (A photograph is available on Zeiss's microscope history Web page.) The microscope complex grew in the sense that as we wanted more and more control of the microscope functionality, we added it. In addition to control of the stage and control of the Z-axis, we also wanted control of the frequency of light that went through it. Although we experimented with various color selection methods, we settled for using interference filters. The RTPP and the microscope were controlled in real-time by a polling routine in BMON2 with the (X,Y,Z) direction control switches, A /Ds, and other states available for programs needing this data. Of course Lew Lipkin's pick-list idea was implemented and was part of BMON2.

In retrospect, we made one mistake in designing the optical microscope. It should have been an inverted microscope from the start because most of our efforts dealt with living cultures. It was difficult to do a living culture. To put a tissue culture plate down on the stage, you had to use inverted objectives because of the standard microscope structure. The optical path was such that the index of refraction of the culture flask introduced so much of an optical path that only the lower power inverted objectives could be used.

RTPP and the move from Bethesda to the Park Building in Rockville

We had started constructing the RTPP when we were in Building 36 (NINDB's building) in Bethesda and around 1980, we were moved to the off-campus Park Building because we had switched from NINDB to NCI, and NCI had no extra lab space available on the Bethesda campus. In moving, we had to dissemble the RTPP and PDP8e racks, Quantimet, Axiomat microscope, etc., and reassemble the system at the Park building. With George's help (he flew in again), Mort got the system back on the air within a reasonable time.

In addition to all the system components that were moved, we also moved a two-ton marble vibration isolation table that floated on air cylinders. The table, about 6' x 4' x 8", was used to isolate the microscope/scanner system from building vibrations. We had also used a smaller version of the floating marble table with the grain counter project and had been pleased with its result. One of the concerns in the move was getting this very heavy marble block up the elevator (hoping that the elevator didn't break loose or the floor cave in). In any case, it worked well in the new building.

Another concern was the electrical system. Before we moved to the Park building, Mort checked out the building's electrical system and found that it did not have adequate grounding. If this was not corrected, then we would be picking up noise through the power lines to the equipment. So he had the building engineers install ground-coupled copper-braided cables to improve the electrical system. Another problem was the building management's installation of a huge building power transformer right in the middle of our electronics area, which caused major 60Hz interference in the equipment. This problem was corrected by having the transformer moved to a non-critical area.

The Park Building was less than ideal, because of frequent loss of power, loss of air-conditioning (the temperature rising to over 100 degrees F one time destroyed several boards in the DECsystem-2020), and roof-leaks on the computers whenever it rained hard. In short, it was a terrible building. We had mix-ups including advertising mail addressed to "Mr. Park Building." But, during the time in the Park Building, we began to use the RTPP more heavily and then built a second stripped-down version of the RTPP with the same type of PDP8e and image buffer memories, but with a Conrac TV monitor, graph-pen tablet (for entering x,y, data), and without the fancy control desk.

BMON2 software control program for the RTPP

The software control program for the buffer memory I constructed on the PDP8e was called BMON2 (the Buffer Memory Monitor System) [40, TR-21, TR-21b, TR-23] and written in Fortran-II. BMON2, in addition to interfacing with the RTPP, also allowed running other programs to be batched to analyze the data. Given that the PDP8e had 32K words of memory, this was critical for doing complex sequential operations and for easily writing new RTPP applications. A Fortran-II library that could interface with the RTPP, BMOMNI [TR-23], allowed these other programs to access the RTPP as required. (See discussion on Fortran-II in the section on the grain counter. This shows the BMOMNI Fortran code.) BMON2 could capture and display images and do many image processing operations on the PDP8e. Another program called FLICKER [13] ran on the PDP8e and was used to analyze 2D gel images visually by alternately displaying one movable image on the video screen relative to another that was held in a constant screen position. Later, it allowed the comparison of two saved images as well. So a set of images could be compared against a reference sample. Some of the ideas on using flickering images to detect subtle differences in image matching were suggested by Bernice Lipkin, who is an expert in psychopictorics [41]. A third-generation version of FLICKER is available as open-source software at http://open2dprot.sourceforge.net/Flicker.

Fortran-II source code of BMON2 and the image processing functions

For those interested in how we coded various image processing functions, we have an annotated list of the BMON2 Fortran-II programs and libraries. If you look at this, you might want also to take a look at the associated paper and technical reports on BMON2 which describe the design in more detail [40, TR-21, TR-21b, TR-23].

The DECsystem-2020 and the RTPP

A Digital Equipment Corporation DECsystem-2020 was installed in the laboratory after we moved to the Park Building. We had been using the NIH's Division of Computer Research and Technology (DCRT) [now the Center for Information Technology (CIT)] DECsystem-10 time-shared system. As we used TOPS-10 operating system on the DECsystem-10, we installed TOPS-10 on the new DECsystem-2020. Bruce Shapiro had implemented a message-switching high-speed 9600-baud (normal speed was 300 or 1200 baud at the time) serial line multiplexor so we could move images and data to/from the DCRT system. However, the costs for the increasing amount of time we used on the DCRT system was escalating. For a cost comparable to renting time over a few years, we could purchase a dedicated system and have more compute power as well. So NCI supported us in purchasing the DECsystem-2020. This was a DEC Unibus system, which meant we could interface our hardware to this then-powerful 36-bit computer. In hindsight, this was one of the best procurements that Lew made. It offered us vastly better opportunities to interact with and manage the data that would not have been possible with a 9600 baud serial line. We could write software in the SAIL language, which meant we would have much more expressive power than we had with the PDP8e or PDP11 computers and could apply more advanced algorithms. This made a real difference in the productivity in analyzing real data with powerful algorithms.

The RTPP/BMON2 system was later interfaced to a DECsystem-2020 running the TOPS-10 operating system. The RTPP was triple-ported in a priority network to the Quantimet TV camera, the Quantimet display, and finally the PDP8e (via Direct Memory Access (DMA)), in that order, so as to minimize interference with the TV camera and display. DMA would occur during the TV horizontal-sync line-refresh times when the user would not notice it on the TV.

Later, the DECsystem-2020 was connected to the RTPP/PDP8e via a DMA interface. A DMA device on the PDP8e was connected by cable to a DMA interface (DR11-W) on the DECsystem-2020. An advantage of the DECsystem-2020 over the earlier PDP10 computer was that although it was a 36-bit /word computer, the 2020 could use less expensive 16-bit Unibus peripherals. Dan Kilgore of the Large Systems Group of DEC was contracted to write a TOPS-10 device driver to access this interface on the 2020. The 2020 system had the computational power required for larger, more complex projects because of its larger programming memory (512K 36-bit words), powerful instruction set, and the high-level SAIL language (Stanford Artificial Intelligence Language), an extended ALGOL-60 dialect. Later, Mort Schultz built a 500-Kbits/second high-speed serial line between the PDP8e and the DECsystem-2020 to control the PDP8e and thus BMON2 from the DECsystem-2020. This allowed the 2020 to treat the PDP8e as a slave processor and be controlled by software rather than typing on the PDP8e's terminal.

The PDP11 virtual device control between the DECsystem-2020 and Comtals

In addition to the RTPP, we acquired Comtal image processor systems that had Q-bus type PDP11 interfaces. These in turn were interfaced to a PDP11 /40 computer that was connected to the DECsystem-2020 via software called SPIDER, a virtual device driver network. SPIDER allowed PDP11 computers to be accessed from the DECsystem2020 without writing a new DECsystem-2020 driver for each new PDP11 device. Bruce Shapiro, our expert on PDP11s, wrote a time-shared packet switcher on the PDP11/40 to connect PDP11 devices to this network. I wrote the device driver on the DECsystem-2020 to access these devices and make them available for DECsystem-2020 application software. Images acquired using the RTPP could be analyzed on the Comtals; Bruce used this to help analyze his nucleic acid electron micrographs.

Analysis software using the RTPP/DECsystem-2020

Many software analysis systems were developed using the RTPP, especially in the area of 2D gels with the GELLAB-I system [13, 14, 15, 16, 17, 18, 19, 20, 21, 22, 23,24, 25, 26, 27, 28, 29, 30, 31, 32], a 2D gel exploratory data analysis system integrating the image-processing with statistical databases for multiple samples (myself); and RNA electron micrographs of secondary structure [10, 11, 32, 39, 48, 49] (Bruce Shapiro). After the RTPP was decommissioned, GELLAB-I was redeveloped as a portable software system using Unix/C/X-windows and was called GELLAB-II [42, 43, 44, 45] (see Lemkin's History of GELLAB for more details, references, and history of GELLAB-II). Much of the work with GELLAB-I and GELLAB-II in exploratory data analysis led to its application to the DNA microarray domain (see http://maexplorer.sourceforge.net/) MAExplorer []. A third-generation instantiation of this data-mining system is part of the Open2Dprot open-source project at http://open2dprot.sourceforge.net/ with the goal of extending proteomics data mining to 2D LC-MS, protein-arrays. Bruce went on to develop other RNA analysis software [35, 39, 47, 48, 49, 50], leading to the StructureLab project [50] and related RNA structure analysis (see his RNA structure research group).

6. Details on the RTPP Design

Some of the design details were unique to the Real Time Picture Processor at that era of computer designs. A few of these are illustrated in the following figures. The design is explained in more detail in references [3, 4] and in technical reports [TR-7, TR-7a, TR-23]. Figures 4 and 5 show block diagrams of the components of the system. Figures 6 and 7 show the interactive control desk that the operator used to interact with the PDP8e and thus the RTPP.

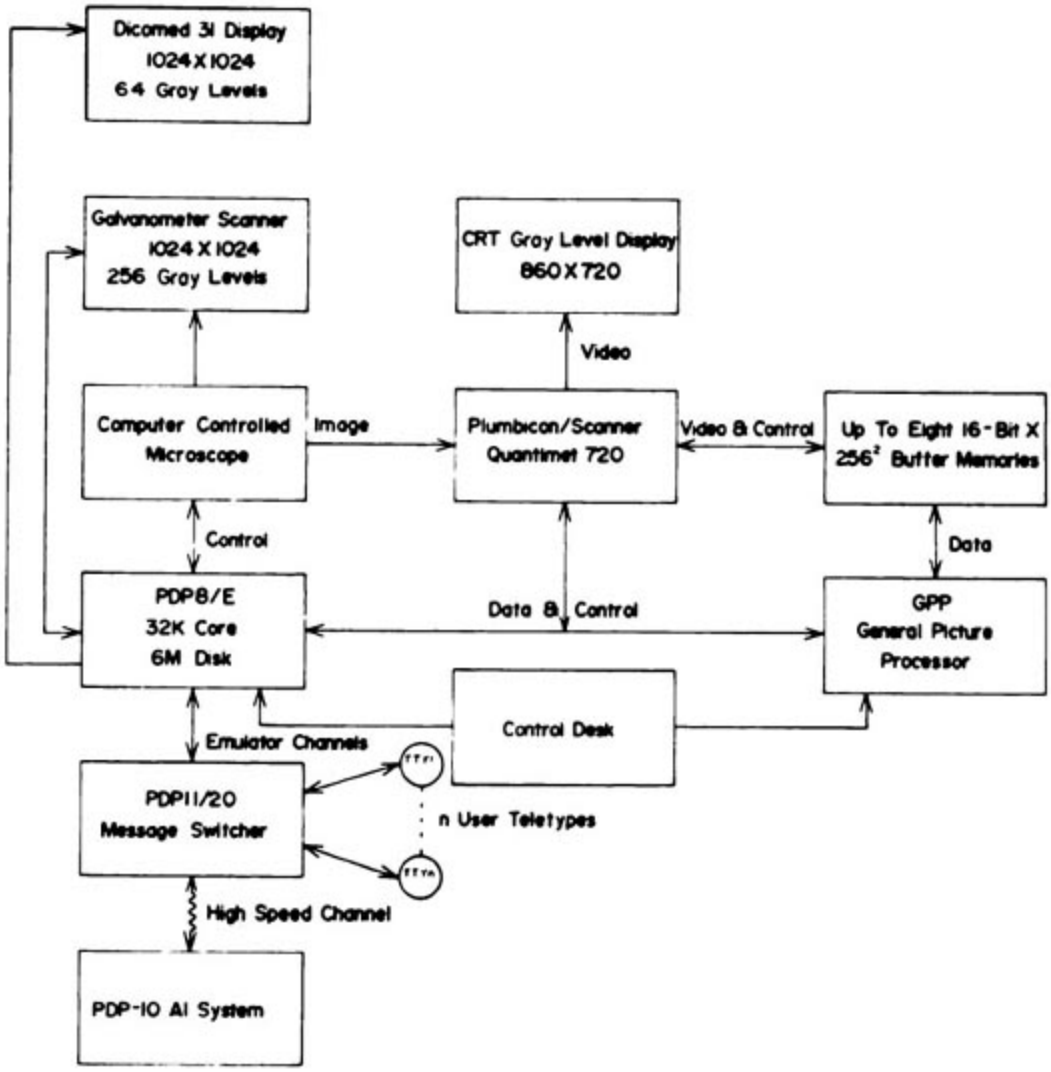

Figure 4. The Real Time Picture Processor (RTPP) block diagram (reproduced with permission, from *J. Histochem. Cytochem.* [4], 1974). This shows additional parts of the system including a PDP11/20 message switcher to a PDP-10 Artificial Intelligence system PRDL (PRocedural Description Language) [5, TR-15] originally being developed on NIH's DCRT (now CIT) PDP-10 facility. The early microscope also had a 1024x1024 8-bit galvanometer scanner that could be used in place of the Quantimet 720 scanner. The later microscope was built around a Zeiss Axiomat microscope. An early high-quality grayscale display (Dicomed 31) was also used to make high-quality display images. Its functionality was replaced by the Quantimet grayscale buffer-memory display. The PDP8e accessed the RTPP using the BMON2 software [40, TR-21b]. The PDP-10 multiprocessor KL-10 system was a shared time-share computer at DCRT (now CIT). This was replaced in our design by a dedicated DECsystem-2020 when it became more cost-effective to have a dedicated computer. The DECsystem-2020 was a new microcoded processor that DEC was able to build for a fraction of the cost of the PDP-10. The PRDL [TR-15] and PROC10 [TR-8] image processing software were created to interface with the RTPP. We had considered creating a MAIN SAIL(R) compiler for use with the GPPASM (GPP assembler program) [TR-16] so that we could program the GPP in a SAIL-like language only available on large PDP-10 class systems. Later, a light box for films was used with the Quantimet vidicon scanner (see Figure 18) with changeable 35mm lenses (not shown in this block diagram - see Figure 5) to scan autoradiograph and wet 2D gels, RNA electron micrographs, and other transparencies.

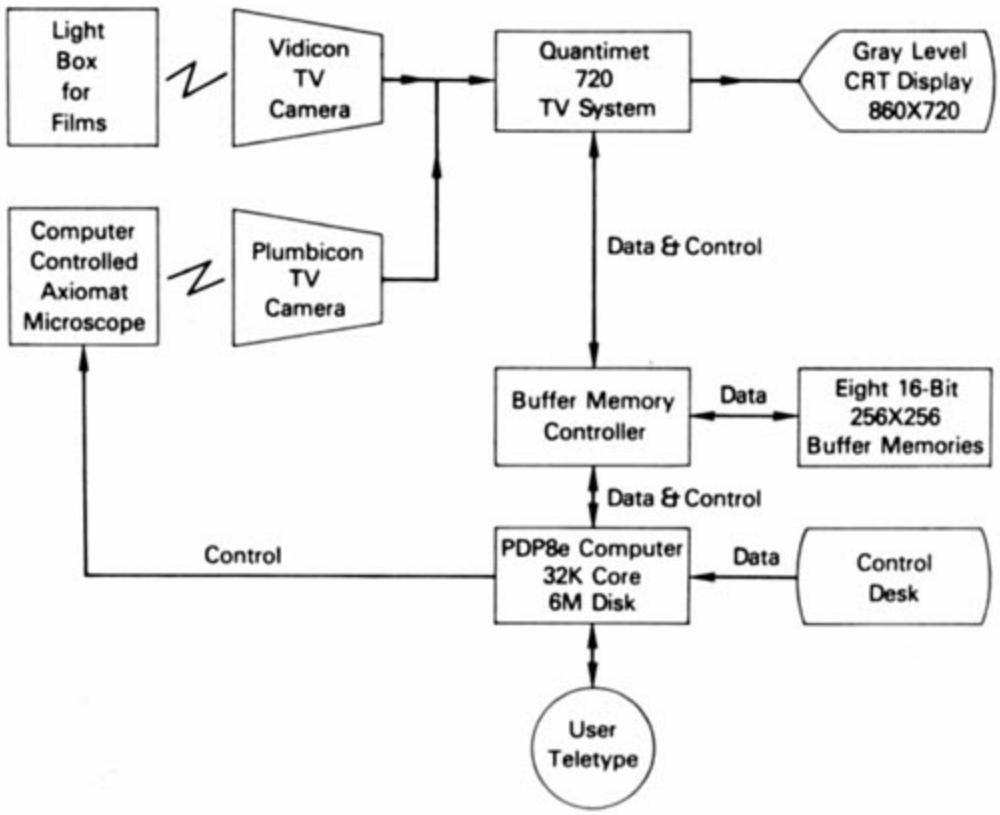

Figure 5. A simplified block diagram of the Real Time Picture Processor illustrating the two types of input and the microscope control from BMON2 paper [4
], 1980. (Reprinted from *Computer Programs in Biomedicine*, vol 11, Lemkin P., Lipkin, L., BMON2 - A distributed monitor system for biological image processing, pp 21-42, Copyright (1980), with permission from Elsevier.) The PDP8e computer directed the microscope stage to positions determined either manually by the operator or by a list of positions defined by the user and then controlled by the computer. Images could be acquired by the buffer memories for processing by the BMON2 system. Raw images as well as processed images could be displayed on the Quantimet 720 CRT display. TV camera input was from either of the two TV cameras that were easily changed. The user interacted with the hardware using the control panel connected to the PDP8e using the BMON2 image processing software system.

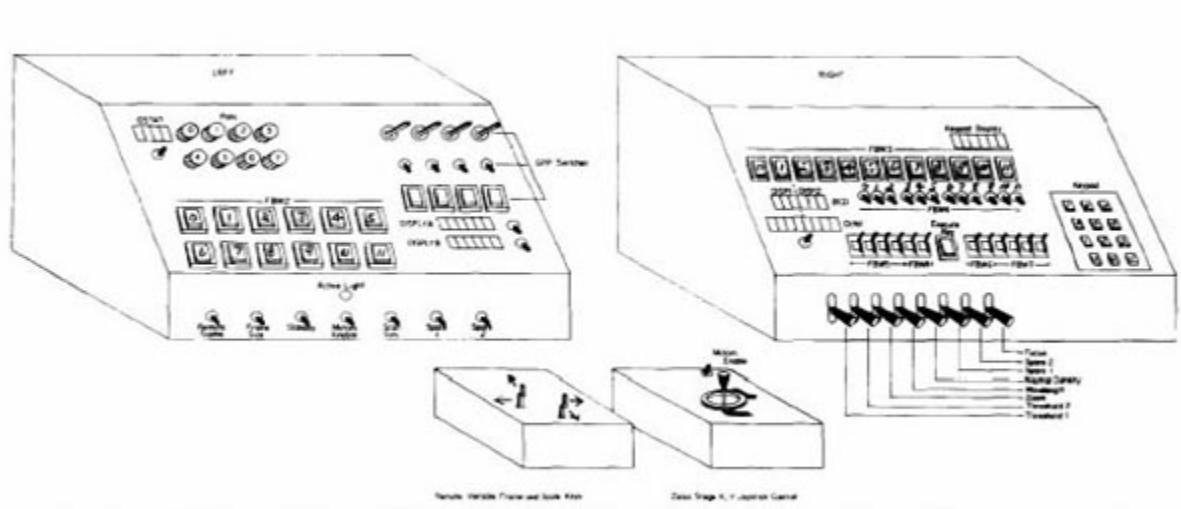

Figure 6. RTPP Control Console was interfaced to the PDP8e and used to interact with the RTPP using the BMON2 buffer memory monitor operating system [40, TR-21, TR-21b]. See Figure 2 in [TR-21b] for the full description. It had various knobs (connected to A/D converters read by the PDP8e), lights for feedback, command buttons, toggle switches, and momentary toggle switches. Only some of these controls were used in the various programs, but having a variety of control options providing flexibility in the user interface. However, this was sometimes at the cost of added complexity and sometimes users had difficulty in learning the system because of this. ("All those knobs, buttons and switches!") However, this flexibility gave us the option of experimenting with various interaction modes that could then be optimized for particular analysis programs. This was before the computer mouse and graphical user interfaces became commonly available. (Click on this figure to bring up the high-resolution version of the figure. You may have to make your browser window larger.)

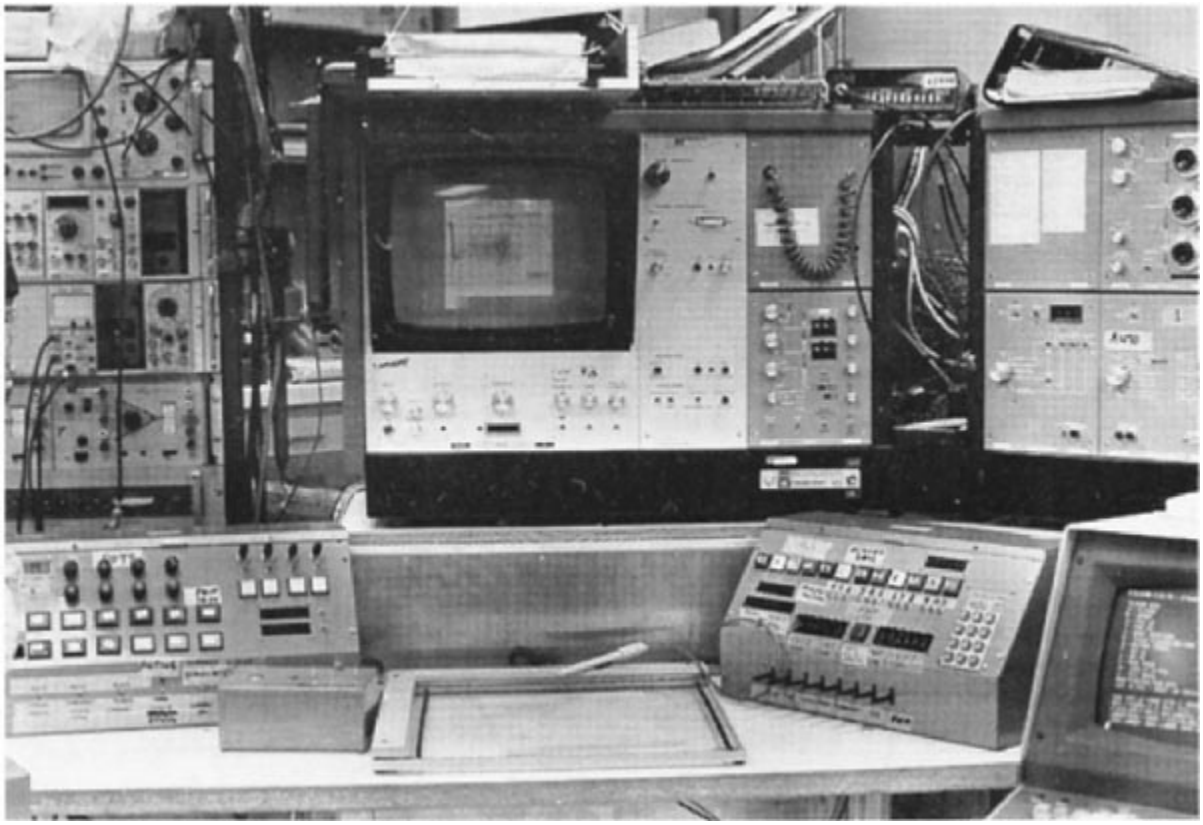

Figure 7. Photograph of the Quantimet-TV and control-console for the RTPP using the BMON2 software [40, TR-21, TR-21b, TR-23]. This was taken after we had moved the RTPP to the Park Building in Rockville, MD. (Reproduced from a figure with permission from *Environmental Health Perspectives*, 1980 []). The control desk had a microscope joystick (X,Y) and Z-axis (focus) control; knobs (connected to A/D converters read by the PDP8e), switches and lights that could be configured in various ways by the BMON2 software. The small box shown in the lower left allowed us to control the 4 edges of a frame as (X,Y) positions. It used four bi-directional two-level spring-loaded switches in a (North, South, East, or West) configuration. These switches came from the LINC-8 and were perfect for this type of control. This allowed us to easily control the direction of a cursor - much as is done today using the mouse, which did not exist at the time). Real-time video control was performed using the RTPP buffer memory controller hardware, which in turn was configured by the PDP8e. The control desk gave us a lot of flexibility - even if its complexity was sometimes compared to that of the starship Enterprise. Various programs (BMON2, FLICKER [13], LANDMARK in the GELLAB-I system [15, 17, 31], and others) could use that subset of the controls most appropriate for the particular application.

The buffer memory image cards

The sample card shown below (front and back) illustrates the complexity of building large memory cards back in the early 1970s (Figures 8 through 10). Increases in chip memory capacity enabled enough memory to be put on a few cards to represent images with detail sufficient for meaningful biological image analysis. Before these new memory chips (the Texas Instruments TMS 4030 chip was a 4Kx1 bit dynamic RAM) were available, we had planned to construct the buffer memories using static shift-register memory chips (as George had done in the grain counter system). Total memory pixel size was 1 megabyte for the 64 boards - today 1 gigabyte of memory the size of a thumbnail sells for under $25 (on sale). Not only would the static shift-register memory chips have been more expensive, but also they also would not have had the random access performance we required in image processing, creating an inadequate design. The shift registers would have led to a slower, much smaller memory using more power for the same cost. The image pixels size and number of images in the buffer memories would have been less and many of the powerful software applications we used the RTPP for would not have worked as well or even been developed.

During this time, we had the conviction, led by Lew Lipkin and George Carman, that anything that we wanted to be do in software could be done by a series of sequential gates. These could be proved Boolean algebraically correct using Karnaugh Maps, hardware finite state machines, and related techniques. George had just taken a microprogramming design course as part of his masters degree in computer hardware architecture and the design of buffer memories and the General Picture Processor (GPP) were perfect test beds in which to try out these new design principles which were relatively new for projects like this. Some of the design diagrams are shown in Figures 11 through 14 (from the Carman [4] paper). Figure 15 shows some examples of GPP microprogrammed instructions for manipulating the buffer memory data. The design was further described in some of the technical reports [TR-7, TR-7a, TR-16, TR-21, TR-21b, TR-22] listed at the end of this history. Because we were prototyping the system, the card was constructed using wire wrapping rather than multilayer printed circuit boards. A commercial version would have used printed circuit boards, but would only have been economically feasible if many copies of the RTPP were produced. Using complex multi-level printed circuit boards is generally too expensive for a research lab.

Figure 8. Front of a buffer memory image card containing 64Kb x 16-bits of dynamic RAM constructed from 4Kx1 bit dynamic RAM chips (Texas Instruments part number TMS 4030) initially sold by Texas Instruments and later second-sourced by National Semiconductor and Signetics. Four boards constituted a 256x256x16-bit pixel sub-image. Either the high or low 8-bit byte (or neither) could be displayed. Each 256x256 sub-image could be positioned to any part of the 860x720 pixel TV screen. For many applications, to create a 512x512 image, four 256x256 sub-images were grouped to form a 512x512 image.

Figure 9. The 4Kx1 bit dynamic RAM or DRAM chip (part number TMS 4030) initially sold by Texas Instruments and second sourced by National Semiconductor, and Signetics (shown here). These were the first affordable (about $20 at the time) DRAMs available in large quantitities. Because chip vendors want to assure customers that the parts will always be available, they license other chip makers to "second source" interchangeable chips. Our memory boards are a mix of the black, silver, and gold colored chips because we used several vendors.
Figure 10. Back of a buffer memory image card containing 64Kb x 16-bits of dynamic RAM constructed from 4Kx1 bit dynamic RAM (part number TMS 4030) chips initially sold by Texas Instruments and second sourced by National Semiconductor and Signetics. There were over 3,000 wirewraps on each board. The initial card was designed and hand wired by George Carman, and Cambion Corporation replicated 63 additional cards with wirewrap wiring lists generated by George. Their automatic robots would position the board for each of the wrap positions and then wire that point. The photograph illustrates how easy it is to get lost in this forest of pins and wires. Doing this by hand would have been impossible. George felt that no other company could build the boards in the time frame with the essential quality control we required. He was right. Only one of the 63 the boards delivered was defective, which was amazing considering the complexity and number of boards. Because of the high frequency signals involved, George put small black decoupling capacitors on each board to "tune" it to minimize cross talk. So each board, then, was in some sense unique.

Figure 11. The RTPP buffer memory control logic (reproduced with permission from *J. Histochem. Cytochem.* [4], 1974). "Each buffer memory is an asynchronous device that received I/O requests either from the general picture process (GPP) or the Quantimet for input or output. Given a request and an address, it first checked to see whether the last (high order 14-bit address) four-word buffer accessed was the same as that for the current request. If so, it did not have to do another memory (RAM) cycle and the signal OLDBWB signal is 'true'. When a read cycle occurred and a different FWB was needed, it checked to see if the FWB was 'dirtied', in which case it must write it back into the memory before the next current request could be proceed. Being dynamic RAMs, they must be refreshed (logic not shown) so as not to lose the data."

Figure 12. The RTPP general picture processor (GPP) bus structure (reproduced with permission from *J. Histochem. Cytochem.* [4], 1974). "The instruction addressing sequence is done serially. That is, Pi is addressed, then P2, then P3. Let 'c(.)' denote 'contents of current memory location'. If any address is immediate, no memory fetch is done. Rather, the PM data, c(P), is enabled onto the data bus DB. If direct addressing mode c(c(P)) is used, the PM data c(P) is enabled onto the data address bus, DAB, and then loaded onto the appropriate data field address register. The memory then enables its data, c(c(P)), onto the data base, DB. If indirect mode is used then the same sequence is repeated as for direct mode, but c(c(P)) is enabled back onto the DAB instead of the DB. Then the data address field register addressed is loaded and the c(c(c(P))) from that memory is enabled onto the DB. A conflict may occur in the use of the indirect mode from the 'MOVE' instruction. This is resolved by storing the source data in the data bus register, DBR, temporarily. Various devices and memories are connected to the bus structure and interact when the control section activates them. The average GPP instruction time is designed to be on the order of 250 nanoseconds." (Click on this figure to bring up the high-resolution version of the figure. You may have to make your browser window larger.)
Figure 13. The RTPP triple line buffer logic (reproduced with permission from *J. Histochem. Cytochem.* [4], 1974). "The RTPP was designed to do 3x3 neighborhood image-processing in parallel in the GPP. Associated with the three lines is an effective Y dynamic address used to order the three lines as to (Y-1,Y,Y+1). In reading a raster line pattern into the triple line buffer, the oldest line must be replaced with the newest line. Similarly, the other two lines need to be adjusted as (Y-1,Y,Y+1) to (Y,Y+1,Y+2). By selecting the effective line address with a modulo three dynamic Y address counter, a dynamic Y address can be implemented. This is similar to the concept of buffer. The three X dynamic address vectors point to 3x3 neighborhood arrays in the line buffer. This neighborhood is called the current neighborhood. All of the dynamic address vectors are easily and efficiently programmed in the GPP to tessellate the current neighborhood along the three lines in the line buffer."

Figure 14. The RTPP GPP control logic finite state machine (reproduced with permission from *J. Histochem. Cytochem.* [4], 1974). "The GPP control logic is implemented as a finite state machine where the states of the system are defined from the logic flow of the system. This consists of the various bus, register enable and load signals. The state is a function of the current state and the current operator. Thus, to extend the machine, additional states and transitions between states would have been added (see [TR-7,TR-22])."

Figure 15. The Examples of RTPP instructions for the GPP (reproduced with permission from *J. Histochem. Cytochem.* [4], 1974). The Pi refers to a 3x3 pixel neighborhood that would be tessellated through the entire image. The GPP instructions [A HREF="#TR-22">TR-22] could be compiled by the GPPASM [A HREF="#TR-16">TR-16] assembler program running on the PDP8e and then loaded into the GPP instruction memory. A debugger for the GPP was DDTG that ran on the PDP8e [A HREF="#TR-2">TR-2] but controlled the GPP and buffer memories. We had also been evaluating collaborating on the construction of a MAINSAIL(R) compiler to generate GPP assembly code so we could program the RTPP in a SAIL-like language.

7. Applications of the RTPP in Biomedical Research

We describe a few of the main applications that used the Real Time Picture Processor to give a little flavor of its utility. Other projects are referred to in some of the lists of journal articles, technical reports, and in the list of RTPP users towards the end of this article.

Description of optical microscope applications

Lewis Lipkin was working on the cellular effects of asbestos fibers on the induction of pleural sarcoma [10]. Lew developed a culture system that used a macrophage-like P388D1 tissue cell line to study the effect of asbestos fibers on cells. Asbestos fibers were cytotoxic to the P388D1 macrophages in tissue cultures. A microscope system was used to take photographs of samples over multiple days to study fiber-induced cytotoxicity for a range of asbestos and related fibers as in Figure 16. On incubation, the colonies lost numbers of cells, and giant cells occurred in places. In addition, significant changes occurred in cell morphology. Marta Wade, the technician who ran the cell-lines, shot time-lapse photographs of the cells with various types of asbestos fibers. This type of data was among the first candidates for use with the RTPP image-capture system using both phase contrast and differential interference optics on the Zeiss Axiomat microscope. We also used this tissue culture system to when analyzing protein differences of these samples with 2D gels [9]. One of the offshoots of this work was to measure the uniformity of cell-boundary adherence using hundreds of images gathered in 15-second intervals. These were analyzed with the boundary trace transform (BTT) [8, 9] illustrated in Figure 17.

Serial sectioning of Anolus brain

Another of the projects Lew and I were also working on was the construction of a 3D brain atlas of an *anolus* lizard brain using aligned microtomed serial-section images. (Some of the goals for that project were similar to that of the National Library of Medicine's Visible Human. However, this was well before adequate computer technology and resources were available to implement such an atlas.) We wrote a PDP8e program to move the optical microscope stage in (X,Y) while keeping the center of the brain in the scanned visual center of the image field as we switched slides in a series of microtomed serial sections (the Z-axis control was not used in this operation). Each centered image could then be captured and saved as a disk file. The next section visible on the TV camera was compared with the image previously captured and stored in the image buffer memory. This procedure was iteratively repeated with subsequent slides to capture a sequence of aligned serial sections from a set of slides. The buffer memory data was saved at each point on 9-track magnetic tape. (This alignment software subsequently led to our involvement with 2D electrophoretic gels analysis [discussed below].) The set of serial sections could then be re-accessed sequentially to step through the brain slices centered at the selected point. We could generate movie loops with the BMON2 software to move virtually up and down through the serial sections at various frame rates. Because we could store sixteen 256x256 images in the buffer memory, the loops could have up to 16 sections and allowed us to visualize the 3D structure of part of the brain.

Figure 16. Photomicrograph of P388D1 macrophage-like cells 24 hours after amosite asbestos treatment used to study fiber-induced cytotoxicity [9] (reproduced with permission from *Environmental Health Perspectives*, 1980).

Figure 17. (Left) Boundary trace transform (BTT) of 233 images of 15-second interval scans of a single living P388D1 macrophage-like cell (left) (reproduced with permission from *Environmental Health Perspectives*, 1980 [9]). The boundaries for this set of images were traced by hand using a graphics tablet connected to the RTPP. The BTT is a 2D boundary frequency histogram where darker (higher frequency) pixels indicate boundaries of the cell that are more adherent to the glass slide and have less motility. BMON2 captured the set of images data and double buffered them to 9-track magnetic tape, with a 15-second image-sampling interval between scans. (Right) Illustration of a single cell captured by the RTPP using differential interference optics. The algorithm is described in several papers [8, 9]. Movies were made on the RTPP of a subsequence of 16 of the images in which you could see the cell trying to ingest the fiber, the fiber breaking through the other side of the cell (membrane), and then the cell backing up to try to reingest that part of the fiber, etc. These images allowed us to create a probability distribution of adhesion strength for boundary points of amoeboid cells. Points with low probability would flutter and extend. Looking at individual boundaries would not reveal this type of information; it was the ability to integrate large quantities of data that allowed these patterns to be detected. This was the way we thought the system should have been used - finding interesting results when no other method for doing so was possible.

Use of the RTPP for 2D gel electrophoresis

In about 1977, Carl Merril of the National Institutes of Mental Health (NIMH) had a problem. He was working with 2-dimensional (2D) gel electrophoresis to determine protein shifts in *E.coli*amber mutant cultures. However, just overlaying the gels on a light box did not show the differences very well, and he knew a difference should show up in the (MW, pIe) range of the gels. We had constructed a rudimentary flicker comparison program for acquiring aligned serial sections (describe above). A mutual friend, who played ping-pong with Carl, suggested that he contact us because we had this new system to do image processing. We jury-rigged the RTPP with a vidicon camera that could scan the 2D gel image using a 35 mm camera lens using the program we had developed to flicker align the *anolus* brain. The program kept the image just scanned in the buffer memory and the other was in the active video. By alternating one image against the other (i.e., flickering, similar to what we did in aligning *anolus* brain serial sections), we were able to immediately see the amber mutant proteins. Spots had shifted across to the other side of the gel, which is why their detection eluded simple observation. Part of this observation discovered in the gel differences was later validated in wet-lab experiments. At that point, we started developing a series of programs starting with the original FLICKER program reported in [13] and later leading to the GELLAB-I system (i.e., GEL LABoratory for exploratory data analysis).

The FLICKER software allowed users to measure spots as a set of (X,Y) image positions and integrated-densities for each sample. We manually recorded this data for later analysis, manually defining spots to be corresponding if they aligned well with FLICKER.

Figure 18. This was the alternative image acquisition setup. (Reproduced from a figure with permission from a reprint from *Environmental Health Perspectives*, 1980 [9].) A high-quality uniform illumination Aristo light box and Quantimet Vidicon TV camera were used for non-microscope images. A gel autoradiograph, wet 2D gel, electron micrograph, or other transparent sample object was placed on the light box and scanned using the RTPP/Vidicon camera. A NBS standard neutral density step wedge was placed on the bottom of the scan area. This was captured along with the image and was used to calibrate the grayscale pixel data to optical density using a piecewise linear curve fitting algorithm (see [9] for an example). As an aside, the electronics workbench area in the background was where many of the local RTPP electronics assembly was performed in the Park Building.

The manual recording of (gel,X,Y,intensity) data quickly became tedious and error prone as we increased the numbers of gels and numbers of spots measured. This led to an effort to automate the process. A spot segmenter was implemented on the PDP8e which used some of the image memories to store intermediate computations. Most of the time this process worked well, but occasionally a bit would be dropped in an image memory and the program would hang. A spot-pairing method was also implemented on the PDP8e. Around this time, the DECsystem-2020 interface became operational and the software was rewritten in SAIL (Stanford Artificial Intelligence Language) on the more robust DECsystem-2020 software system and became part of the GELLAB-I system [13, 14, 15, 16, 17, 18, 19, 20, 21, 22, 23, 24,25, 26, 27, 28, 29, 30, 31, 32]. The RTPP became a "front-end" for image processing software running on the DECsystem-2020, becoming a slave processor of the software on the DECsystem-2020. The GELLAB-I software then did data acquisition and interactive spot landmarking via the RTPP/BMON2 and subsequent higher level data analysis on the DECsystem-2020.

Eric Lester, M.D. (an oncologist in an NCI postdoctoral program with Dr. Herbert Cooper, Ph.D. in the Laboratory of Pathology of NCI) was one of the early users of the system after our initial work with Carl Merril. Eric was starting to use 2D gels to look at changes in human lymphocytes. Eric painstakingly used the FLICKER program to select and measure integrated density (by drawing circles around the spots and doing background subtraction) for about 20 spots/gel for a large number of gels. Large numbers of spots and sample gels were required to begin to see protein expression patterns statistically associated with experimental conditions. However, in addition to seeing patterns, Eric saw circles when he went home at night from this intense labor. It became apparent that we needed to perform statistics on this data - a key insight. Because the manual data gathering for large numbers of spots was a "one-postdoc" type of experiment, we realized we had to automate the spot quantification. That was when I developed the 2D gel spot segmenter program on the RTPP/PDP8e that could give the list of all quantified spots in a gel image (described in the above paragraph).

Eric painstakingly generated paired data for about 1,400 spots from the segmented images and their paired spot lists for a few gels. Because of the difficulty in matching or pairing spots between gels, I also developed spot-pairing and spot "landmarking" programs, which ran interactively on the RTPP /PDP8e. (Landmarking is visually identifying a set of spots that are common in both the reference gel and each additional gel sample so spot pairing could proceed.) Eric then subjected the data to SPSS statistical analysis with encouraging results (t-Tests, Spearman correlation, ANOVA) and it was published in [14] and enhancements in [15,18-21]. All three of these programs were rewritten in SAIL for the DECsystem-2020. At this point we realized that we wanted to build a database containing large numbers of gels to detect marker proteins or classify samples by protein pattern signatures indicating states of differentiation, disease conditions, or other experimental conditions. This was the basis of GELLAB-I.

This led to the SAIL program CGELP, in GELLAB-I, to construct a composite gel database with a virtual reference gel [14-18,20,30] and the addition of many more statistical methods. (The subsequent Unix version was called CGELP2 [30, 42, 43, 44, 45] where additional statistical exploratory data analysis methods were added - see [history of GELLAB].) Spots of a set of N-1 gels would be matched to one of the gels called a reference gel and spots missing in the physical reference gel would be extrapolated into the reference gel. Figure 19 shows the reference gel 324.1 that was an acute myeloid leukemia (AML) gel, scanned with the RTPP. This reference gel was used in many of the leukemia databases to tie the data together [14, 15, 16, 17, 18, 22]. The collection of SAIL programs, as well as their RTPP interface, was called GELLAB-I. After leaving NIH (for the University of Chicago), Eric would fly back to work in our laboratory to do marathon late-night landmarking sessions to help generate these databases of large numbers of 2D leukemia gels. Over the years, we had built various databases with over 400 gel samples. The leukemia database had over 130 samples. Some of these gel sample images are available on the bioinformatics.org/lecb2dgeldb open source repository. This early research led to my interest in exploratory data analysis and future work with microarrays with MAExplorer.sourceforge.net [46], and proteomics exploratory data analysis using open2dprot.sourceforge.net.

Peter Sonderegger, while a post-doc at the National Institute of Child Health and Development (NICHD), used the GELLAB-I system with the RTPP to investigate how the expression of axonal proteins of sensory and motor neurons was influenced by non-neuronal cells [27, 29, 45]. At the same time we were investigating the feasibility of porting GELLAB-I (written in SAIL) to the PASCAL computer language. The inflexibility of PASCAL eventually led us to convert GELLAB-I to the portable C/UNIX/X-windows environment called GELLAB-II [42, 43, 44, 45] The DECsystem-10 SAIL version, GELLAB-I, was exported to research labs at Univ. of Chicago (Eric Lester) and Univ. of Kiel (Heinz Busse). The Unix version, GELLAB-II, was exported to a number of research labs around the world (CDC with Jim Myrick [44], Univ. Zurich with Peter Sonderegger, Agr. Univ. Norway with Trygve Krekling, and others) and led to a commercial subset version for Windows PCs called GELLAB-II++ by CSPI/Scanalytics.

Figure 19. One of the early 2-dimensional (2D) gels scanned with the vidicon/RTPP system (leukemia AML sample number 324.1 - a 2D-gel autoradiograph scanned to a 512x512 8-bit image) in a collaboration with Eric Lester (NCI oncologist at the time), Lewis Lipkin, and myself with the GELLAB-I system [14, 15, 16, 17, 18, 22]. The film was scanned on a light box (shown in Figure 18 above) along with a neutral-density step wedge at the top so the grayscale image data could be mapped to optical density, resulting in a more linear calibration with protein concentration in the 2D gel. The leukemia gels are part of a public 2D gel database at http://bioinformatics.org/lecb2dgeldb.

Use of the RTPP for RNA secondary structure analysis

In the mid 1970s, Jacob Maizel (who later became chief of the Laboratory of Experimental and Computational Biology) visited the Image Processing Unit (IPU) carrying a set of electron micrographs of RNA molecules. While in the National Institute of Child Health and Development (NICHD), Jake had been using an early Hewlett Packard computer to manually trace the RNA molecules in the electron micrographs to determine the repetitive nature of features that were visible in these images. The traces, called secondary structure maps, indicated where double- and single-stranded regions occurred in the RNA. Knowledge of these regions is important for understanding RNA folding, which in turn is related to RNA's function. This manual task was tedious and Jake wondered whether the image processing hardware and software associated with the RTPP could be used to help generate secondary structure maps automatically. The RTPP was used to scan and preprocess some of these electron micrograph images [33, 34] that were input for this type of analysis. At the same time, Bruce had developed the circle transform [35] for biological shape description for describing cell mitosis with Lew and had published with Dr. Jack Sklansky, Ph.D. [37, 38], who was doing a sabbatical in the IPU at the time. Bruce became interested in the RNA folding problem after working on these shape descriptors for the cellular image domain.

This work led to a series of programs that were able to analyze digital images of the electron micrographs (see Figure 20) by applying algorithms such as shade correction to reduce background noise irregularities, notch filtering, and segmentation to extract the shapes of the individual molecules. The circle transform was then applied to these shapes to produce secondary structure maps [39]. They produced several papers [47, 48, 49, 50, TR-472] as well as Bruce's Ph.D. dissertation [TR-BAS78] under Azriel Rosenfeld at the University of Maryland. Bruce went on to do research on other aspects of RNA structure and function (see www.ccrnp.ncifcrf.gov/~bshapiro), including the use of RNA in nanobiology.

Partly as a result of this collaboration, Jake became more interested in computing, which led him to purchase one of the early DEC VAX computers for his lab. As Jake became more involved with computational techniques, he realized the general importance, as did Lew, of using computers in biology. Eventually, this interest culminated with the National Cancer Institute's purchase of a Cray XMP supercomputer, and the establishment of what is today the Advanced Biomedical Computer Center in Frederick. The Cray XMP, at that time, was the first supercomputer in the world solely dedicated to biomedical research. Thus, the impact of the RTPP continues to be felt in the biological computation sciences 30 years later.

Figure 20. One of the early RNA electron micrographs scanned with the vidicon/RTPP system (Jacob Maizel, Bruce Shapiro, and Lewis Lipkin) [33, 34, 39, 48, 49]. The sample was adenovirus type 2 messenger RNA. Bruce developed boundary segmenters and boundary shape descriptors that could map electron micrograph data to the secondary structure.

8. Discussion of What We Learned

The Real Time Picture Processor (RTPP) project occurred during that window of time when electronics were providing giant leaps forward in the ability to analyze data stored or collected by medical researchers. Prior to this, it would have been very difficult to collect, let alone analyze, the vast amounts of data it is now possible to acquire with new digital technology. This phase encompassed a major shift from analog to digital technology. There was also a shift to use combined hardware and software systems as part of the solution to these problems. Subsequently, as computers became faster, the solutions shifted again from mostly hardware-focused systems to those more software-based systems using less expensive but much more powerful computers becoming available. We were a part of the new digital frontier, making new digital imaging technology available to biomedical collaborators and then collectively devised new ways of look at this data. The tight feedback loop between developers and users was critical for discovering how these new digital imaging technologies could be used.

It should be emphasized that the RTPP was an evolving enterprise that met real demands as it grew. It wasn't constant in nature and various functions were appended as we applied it to real problems. The RTPP grew because of the intellectual demand of the people using it, and it had a biological bias because Lew Lipkin was a biologist. It did not start out as the RTPP, but rather as the idea that a microscope slide was a sort of random access memory. Lew Lipkin's concept that the slide was an information resource was the driving force for this research. He called the list of cell positions the "pick-list" (since the biologist picked them). There were many extensions to this concept along the way. For example, one could sample a set of picked-out cells in a tissue culture and make periodic measurements over time by returning to them in a random-access manner.

In our experience, we found that you can't always design everything 100 percent from the beginning. You have to experiment, try things, and then let the project grow based on what works and what is needed. Having the flexibility to follow new ideas made the development of a functioning buffer image memory subsystem possible. And you have to just throw things away. You have to superannuate them or do new things with them. You don't have to throw things out necessarily, but replace them in an intelligent way in response to the biological research needs. You need enough flexibility in your environment to allow things to grow without having to get permission each time to try something new. It is analogous to a working in a kitchen where you don't know which utensil you will need to use at any particular time. Nobody builds a kitchen with just one knife and spoon.

The automated microscopes, the large image memories, the digital compute power, the fast and high-resolution grayscale display, and the flexible digital user controls all grew as they were needed. At the time, we were fortunate that Lew was able to obtain enough NCI support to allow us to judiciously replace some pieces of equipment that were no longer extendable for the project's goals. Having these resources meant that if we thought of something we needed to build to make the next research step possible, we could begin almost immediately to move ahead because we had the capacity to do so.

We were at the transition from analog solutions to problems to using the new exciting digital methods. We were convinced that anything we wanted to be computed in hardware could be done by a minimum series of hardware gates and finite state machines. George, in particular, was convinced about circuit diagrams being proper and algebraically correct, and that they could be designed and validated using Karnaugh Maps and related computer design tools. We had experienced this with the grain counter so we knew that we could implement complex sequential computational ideas in hardware (as we had done in tracking the grain XY coordinates). The grain counter was the test bed. At that time, we knew what the grain counter would do. What the image memories could do were still a dream at that point, but we had the confidence to attempt building the RTPP. Stretching the envelope made a real difference in the productivity of analyzing real data with powerful algorithms.

Applying new digital imaging methods to biological problems was the way we thought the system should have been used. This let us find interesting results when no other method to do so was available at that time.

The major contributing factor to the success of this project was the great management that Lew Lipkin exhibited. He assembled a group of skilled individuals, fostered communication, encouraged the sharing of information and credit between them with group ownership, and supported the group so that they could get the job done. He collected the right people and trusted them. Bruce Shapiro and I applied what we were learning about image processing and computer science at the University of Maryland to the RTPP design. George Carman brought what he had just learned for his masters in computer hardware architecture about using microprogramming coding to implement flexible hardware designs. Lew was unique in that he understood and could communicate in the jargon of each of these areas. Everyone cooperated, helping everyone else where they could - constantly encouraged by Lew Lipkin's leadership and intellectual curiosity. With this positive communication between us, we made great progress and helped lead the way in automated cytology. It was quite an exciting time.

9. Acknowledgements

This history was compiled by myself (Peter Lemkin) with interviews, recollections, and content from Lewis Lipkin, George Carman, Bruce Shapiro, and Morton Shultz and some of the users (Carl Merril, Peter Sonderegger, Eric Lester). This article could not have been done without everyone's input. Thanks to my wife, Ellen Burchill, for assistance with the editing; Michelle Lyons, the Museum Curator, for helping with accessioning and editing; and to Maritta Grau's Frederick Scientific Publications group for editing suggestions. Any errors of omission or commission in this history are the responsibility of myself and of time. Memories tend to fade as the years pass. We attempted to reconstruct the history as best we could using additional information in papers, files, notes, technical reports, and interviews. We thank the journals that have opened their archives to free public access to old papers.

Since many of the companies and products mentioned in this article have disappeared, we found historical links on the Internet that were useful for providing the context in which to understand this project. When the history was completed, it was donated to the Museum of NIH in the Office of NIH History (http://history.nih.gov/) for use as part of their permanent online exhibits. We also wish to thank them for their help. A buffer memory image board from the original RTPP, selected papers and technical reports illustrating the design were also donated as artifacts. Many of the papers are available as PDF links to the journals, and most of the technical reports are available as downloadable PDF files in the References section of this Web site. The Office of NIH History has permanent exhibits as well as access to these artifacts.

10. References to Papers and Technical Reports for the RTPP

The references are divided into journal articles and technical reports. Where it is possible, we provide links to the PDFs for open access from some of the journals as well as downloadable PDFs for most of the technical reports. The original technical report numbering is used in this history.

Journals:

1. Lipkin, L.E., Watt, W.C., Kirsch, R.A.: The analysis, synthesis, and description of biological images. *Ann N Y Acad Sci.* **128**(3): 984-1012, 1966.
2. Lipkin, L.E., Lemkin, P.F., Carman, G.: Automated autoradiographic grain counting in human determined context. *J. Histochem. Cytochem.* 22(7): 755-765, 1974. (PDF)

3. Lemkin, P.F., Carman, G., Lipkin, L., Shapiro, B., Schultz, M., Kaiser, P.: A real time picture processor for use in biologic cell identification. I. System design. *J. Histochem. Cytochem.* 22(7): 725-731, 1974. (PDF)
4. Carman, G., Lemkin, P.F., Lipkin, L., Shapiro, B., Schultz, M., Kaiser, P.: A real time picture processor for use in biologic cell identification. II. Hardware implementation. *J. Histochem. Cytochem.* 22(7): 732-740, 1974. (PDF)
5. Shapiro, B., Lemkin, P.F., Lipkin, L.: The application of artificial intelligence techniques to biologic cell identification. *J. Histochem. Cytochem.* 22 (7): 741-750, 1974. (PDF)
6. Schultz, M.L., Lipkin, L.E., Wade, M.J., Lemkin, P.F., Carman, G.M.: High resolution shading correction. *J. Histochem. Cytochem.*22(7): 751-754, 1974. (PDF)
7. Shapiro, H.M., Bryan, S.D., Lipkin, L.E., Stein, P.G., Lemkin, P.F.: Computer-aided microspectrophotometry of biological specimens. *Exp Cell Res.* 67(1): 81-89, 1971.
8. Lemkin, P.F.: The boundary trace transform: An edge and region enhancement transform. *Comp. Graphics Image Processing* 9: 150-165, 1979.
9. Lemkin, P.F., Lipkin, L., Merril, C., Shiffrin, S.: Protein abnormalities in macrophages bearing asbestos. *Environ. Health Perspect.* 34: 5-89, 1980. (PDF)
10. Lipkin, L.E.: Cellular effects of asbestos and other fibers: correlations with in vivo induction of pleural sarcoma. *Environ. Health Perspect.* 34:91-102, 1980. (PDF)
11. Lemkin, P.F.: An approach to region splitting. *Comp. Graphics Image Processing* 10: 281-288, 1979.
12. Lemkin, P.F., Lipkin, L.: Use of the positive difference transform for RBC elimination in bone marrow smear images. *Anal. Quant. Cytol.* 1(1): 67-76, 1979.
13. Lemkin, P.F., Merril, C., Lipkin, L., Van Keuren, M., Oertel, W., Shapiro, B., Wade, M., Schultz, M., Smith, E.: Software aids for the analysis of 2D gel electrophoresis images. *Comput. Biomed. Res.* 12: 517-544, 1979.
14. Lester, E.P., Lemkin, P.F., Cooper, H.L., Lipkin, L.E.: Computer-assisted analysis of two-dimensional electrophoresis of human peripheral blood lymphocytes. *Clin. Chem.* 26: 1392-1402, 1980. (PDF)
15. Lipkin, L.E., Lemkin, P.F.: Data base techniques for multiple PAGE (2D gel) analysis. *Clin. Chem.* 26: 1403-1413, 1980. (PDF)
16. Lemkin, P.F., Lipkin, L.: GELLAB: A computer system for 2D gel electrophoresis analysis. I. Segmentation and preliminaries. *Comput. Biomed. Res.* 14: 272-297, 1981.
17. Lemkin, P.F., Lipkin, L.: GELLAB: A computer system for 2D gel electrophoresis analysis. II. Spot pairing. *Comput. Biomed. Res.* 14: 355-380, 1981.
18. Lemkin, P.F., Lipkin, L.: GELLAB: A computer system for 2D gel electrophoresis analysis. III. Multiple gel analysis. *Comput. Biomed. Res.* 14: 407-446, 1981.
19. Lester, E.P., Lemkin, P.F., Lipkin, L.E.: New dimensions in protein analysis - 2D gels coming of age through Image Processing. *Anal. Chem.* 53: 390A-397A, 1981.
20. Lester, E.P., Lemkin, P.F., Lipkin, L.E., Cooper, H.L.: A two-dimensional electrophoretic analysis of protein synthesis in resting and growing lymphocytes in vitro. *J. Immunol.* 126: 1428-1434, 1981.
21. Lemkin, P.F., Lipkin, L.E., Lester, E.P.: Some extensions to the GELLAB 2D electrophoresis gel analysis system. *Clin. Chem.* 28: 840-849, 1982. (PDF)
22. Lester, E.P., Lemkin, P.F., Lipkin, L.E.: A two-dimensional gel analysis of autologous T and B lymphoblastoid cell lines. *Clin. Chem.*28: 828-839, 1982. (PDF)
23. Lester, E.P., Lemkin, P.F., Lowery, J.F., Lipkin, L.E.: Human leukemias: A preliminary 2D electrophoretic analysis. *Electrophoresis* 3: 364-375, 1982.
24. Howard, R.J., Aley, S.B., Lemkin, P.F.: High resolution comparison of Plasmodium Knowlesi clones of different variant antigen phenotypes by 2D gel electrophoresis and computer analysis. *Electrophoresis* 4: 420-427, 1983.
25. Lemkin, P.F., Lipkin, L.E.: 2D Electrophoresis gel data base analysis: Aspects of data structures and search strategies in GELLAB. *Electrophoresis* 4: 71-81, 1983.
26. Lester, E.P., Lemkin, P.F., Lipkin, L.E.: States of differentiation in leukemias: A 2D gel analysis. In Rowley, J. D. and Ultmann, J. E. (Eds.): Proceedings of 5th Annual Bristol Myers Symposium on Cancer Research. Chromosomes and Cancer: From Molecules to Man. New York, Academic Press, 1983, pp. 226-245.
27. Lemkin, P.F., Sonderegger, P., Lipkin, L.: Identification of coordinate pairs of polypeptides: A technique for screening of putative precursor product pairs in 2D gels.*Clin. Chem.* 30: 1965-1971, 1984. (PDF)
28. Lester, E.P., Lemkin, P F., Lipkin, L.E.: Protein indexing in leukemias and lymphomas. *Ann. N.Y. Acad. Sci.* 428: 158-172, 1984.
29. Sonderegger, P., Lemkin, P.F., Lipkin, L., Nelson, P.: Differential modulation of the expression of axonal proteins by non-neuronal cells and the peripheral and central nervous system. *EMBO J.* 4: 1395-1401, 1985. (PDF)
30. Lemkin, P.F., Lipkin, L.E.: GELLAB: Multiple 2D electrophoretic gel analysis. In Allen, R. and Arnaud (Eds.): Electrophoresis '81. New York, W. De Gruyter, 1981, pp. 401-411.
31. Lemkin, P.F. , Lipkin, L.E.: Database techniques for 2D electrophoretic gel analysis. In Geisow, M. and Barrett, A. (Eds.): Computing in Biological Science. North Holland, Elsevier, 1983, pp. 181-226.
32. Lester, E.P., Lemkin, P.F.: A 'GELLAB' computer assisted 2D gel analysis of states of differentiation in hematopoietic cells. In Neuhoff, V. (Ed.): Electrophoresis '84. Chemie, Springer-Verlag, 1984, pp. 309-311.
33. Lemkin, P.F., Shapiro, B., Lipkin, L., Maizel, J., Sklansky, J., Schultz, M.: Preprocessing of electron micrographs of nucleic acid molecules for automatic analysis by computer. II. Noise removal and gap filling. *Comput. Biomed. Res.* 12: 615-630, 1979.
34. Lipkin, L., Lemkin, P.F., Shapiro, B., Sklansky, J.: Preprocessing of electron micrographs of nucleic acid molecules for automatic analysis by computer. *Comput. Biomed. Res.* 12: 279-289, 1979.
35. Shapiro, B., Lipkin L.: The circle transform, an articulable shape descriptor. *Comput. Biomed. Res.* 10: 511-28, 1977.
36. Shapiro, B.: Language processor generation with BNF inputs: methods and implementation. *Comp. Programs. Biomedicine* 7:85-98, 1977.
37. Shapiro, B., Pisa, J., Sklansky, J.: Skeletons from sequential boundary data. Proc. Intl. Conf. On Pattern Recognition and Image Processing. IEEE Comp. Soc. Press, Los Angeles, CA., 265-270, 1979.
38. Shapiro, B., Pisa, J., Sklansky, J.: Skeleton generation from xy boundary sequences. *Comp. Vision Graphics Image Processing* **15**(2) 136-153, 1981.
39. Shapiro, B.S., Lipkin, L.E., Maizel, J.V.: Computerized generation of secondary structure maps for nucleic acids. *Comp. Biomed. Res.*12(6):545-568, 1979.
40. Lemkin, P.F., Lipkin, L.: BMON2 - A distributed monitor system for biological image processing. *Computer Programs in Biomedicine* 11: 21-42, 1980. (PDF)*Reprinted from COMPUTER METHODS AND PROGRAMS IN BIOMEDICINE, Vol 11, Lemkin PD and LipkinL, BMON2 - A distributed monitor system for biological image processing, Pages 21-42, Copyright (1980), with permission from Elsevier.*
41. Lipkin, B.S., Rosenfeld, A. (Eds): Picture Processing and Psychopictorics. Academic Press, New York, 1970, pps 526.
42. Lemkin, P.F.: GELLAB-II: A workstation based 2D electrophoresis gel analysis system. In Endler, T. and Hanash, S. (Eds.): Proceedings of 2D Electrophoresis. West Germany, VCH Press, 1989, pp. 52-57. (This was the announcement of GELLAB-II)
43. Lemkin, P.F., Lester, E.P.: Database and search techniques for 2D gel protein data: A comparison of paradigms for exploratory data analysis and prospects for biological modeling. *Electrophoresis* 10(2): 122-140, 1989.

44. Robinson, M.K., Myrick, J.E., Henderson, L.O., Coles, C.D., Powell, M.K., Orr, G.A., Lemkin, P.F.: Two-dimensional protein electrophoresis and multiple hypothesis testing to detect potential serum protein biomarkers in children with fetal alcohol syndrome. *Electrophoresis* 16: 1176-1183, 1995.
45. Stoeckli, E.T., Lemkin, P.F., Kuhn, T.B., Ruegg, M.A., Heller, M., Sonderegger, P.: Identification of proteins secreted from axons of embryonic dorsal-root-ganglia neurons. *Eur. J. Biochem.* 180: 249-258, 1989.
46. Lemkin, P.F., Thornwall, G., Walton, K., Hennighausen, L: The Microarray Explorer tool for data mining of cDNA microarrays - application for the mammary gland, *Nucleic Acids Res.* 20(22): 4452-4459, 2000.
47. Shapiro, B.A.: An algorithm for comparing multiple RNA secondary structures. *Comput. Appl. Biosci.* 4(3): 387-393, 1988.
48. Margalit, H., Shapiro, B.A., Oppenheim, A.B., Maizel, J.V. Jr.: Detection of common motifs in RNA secondary structures. *Nucleic Acids Res.* 17 (12): 4829-4845, 1989.
49. Le, S.Y., Owens, J., Nussinov, R., Chen, J.H., Shapiro, B., Maizel, J.V.: RNA secondary structures: comparison and determination of frequently recurring substructures by consensus. *Comput. Appl. Biosci.* 5(3): 205-210, 1989.
50. Shapiro, B.A., Kasprzak, W.: STRUCTURELAB: a heterogeneous bioinformatics system for RNA structure analysis. *J Mol. Graph.*14(4): 194-205, 222-224, 1996.

Technical Reports:

These reports were archived in the U.S. Department of Commerce's National Technical Information Service (NTIS) in Springfield VA. They currently offer online reports from 1990 on their web site http://www.ntis.gov/, although older reports can be ordered. Some additional reports appeared as University of Maryland Computer Science Center technical reports.

- TR-2. Lemkin, P.F.: DDTG - Functional specification for the RTPP monitor. NCI/IP TR-2, 2-5-1976. NTIS Accession No. PB250726/AS, Springfield, VA, 1976, 90 pp. (Also in DECUS No. 8-823). (PDF)
- TR-7. Lemkin, P.F., Carman, G., Lipkin, L., Shapiro, B., Schultz, M.: Real time picture processor: Description and specification. NCI/IP TR-7, 2-31-1976. NTIS Accession No. PB252268/AS, Springfield, VA, 1976, 139 pp. (PDF)
- TR-7a. Lemkin, P.F.: Real Time Picture Processor: Description and specification. TR-7a, 6-23-1977. NTIS Accession No. PB269600/AS, Springfield, VA, 1977, 185 pp. (PDF TR-7a)
- TR-8. Lemkin, P.F., Shapiro, B., Gordon, R., Lipkin, L.: PROC10 - An image processing system for the PDP10: Description and specification. NCI /IP TR-8, 12-16-1976. NTIS Accession No. PB261535/AS. Springfield, Va., 1976, 53 pp. (Also in DECUS No. 10-270). (PDF)
- TR-15. Shapiro, B., Lemkin, P.F.: PRDL - Procedural Description Language. NCI/IP TR-15, 10-10-1977. NTIS Accession No. PB273112/AS Springfield, Va., 1977, 23 pp. (PDF)
- TR-16. Lemkin, P.F., Shapiro, B., Schultz, M., Lipkin, L., Carman, G.: GPPASM - A PDP8e assembler for the General Picture Processor. NCI/IP TR-16, 12-15-1976. NTIS Accession No. PB261537/AS, Springfield, VA, 1976, 45 pp. (PDF)
- TR-21. Lemkin, P.F.: Buffer memory monitor system for interactive image processing. NCI/IP TR-21, 3-31-1976. NTIS Accession No. PB261536 /AS, Springfield, VA, 1976, 26 pp. (PDF)
- TR21-b. Lemkin, P.F.: BMON2 - buffer memory monitor system for interactive image processing. NCI/IP TR-21b, 3-17-1978. NTIS Accession No. PB269642/AS, Springfield, VA, 1978, 112 pp. (PDF)
- TR-22. Carman, G., Lemkin, P.F., Schultz, M., Lipkin, L., Shapiro, B.: Microprogram control architecture for the General Picture Processor. NCI/IP TR-22, 4-22-1977. NTIS Accession No. PB269762/AS, Springfield, VA, 1977, 35 pp. (PDF)
- TR-23. Lemkin, P.F.: BMOMNI - Fortran interface program for the RTPP buffer memory, Quantimet and control desk. NCI/IP TR-23, 12-14-1976. NTIS Accession No. PB261538/AS, Springfield, VA, 1976, 10 pp. (PDF)
- TR-472. Shapiro, B.: The use of orthogonal expansion for biological shape description. College Park, MD, University of Maryland Computer Science Center TR-472, Aug. 1976, pp 30. TR-653. Lemkin, P.F.: Bone marrow smear image analysis. College Park, MD, University of Maryland Computer Science Center TR-653, April, 1978, 156 pp. (PDF)
- TR-655. Lemkin, P.F.: The run length map: A representation of contours and regions for efficient search and low level semantic encoding. College Park, MD, University of Maryland Computer Science Center TR-655, April, 1978, 60 pp. (PDF)
- TR-BAS78. Shapiro, B.S.: "Shape description using boundary sequences", U. Maryland Computer Science Dept, 1978. (Ph.D. dissertation).

Peter F. Lemkin, Lemkingroup.com

(Note: You may also access the PDF and journal articles on the lemkingroup.com RTTP history mirror.)
Original: 02/25/2007, Version #57 - original released to History of NIH
Revised: 9/5/2011, Version: #59 - fixed missing links and navigation change
Content transferred from html to confluence: Spring 2019, Fixed footnote page anchors that weren't functioning.